DIMENSIONS

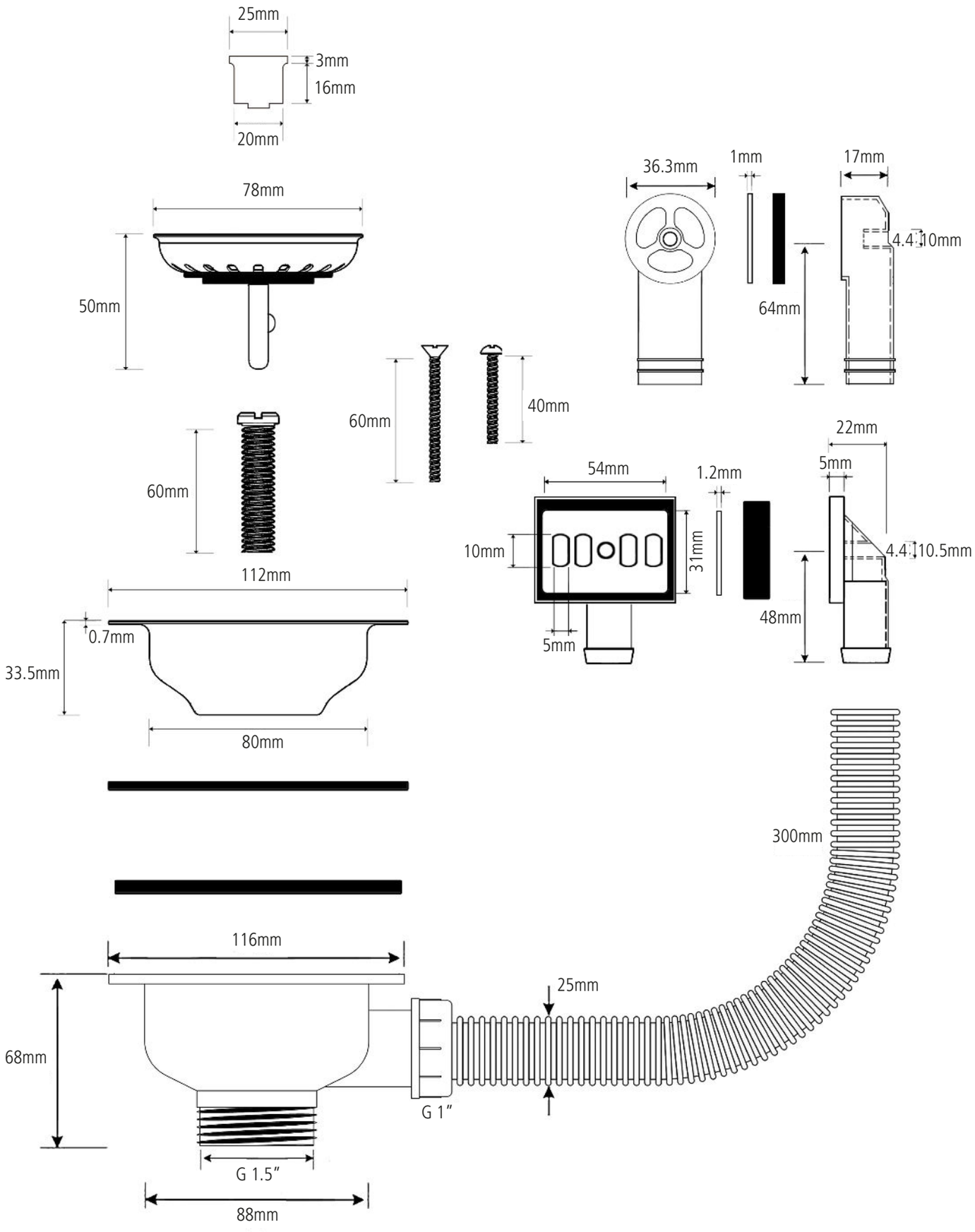
25mm
3mm
16mm
20mm
78mm
50mm
60mm
60mm
40mm
36.3mm
1mm
17mm
4.4
10mm
64mm
22mm
5mm
54mm
1.2mm
10mm
31mm
4.4
10.5mm
48mm
5mm
112mm
0.7mm
33.5mm
80mm
300mm
116mm
25mm
68mm
G 1"
G 1.5"
88mm

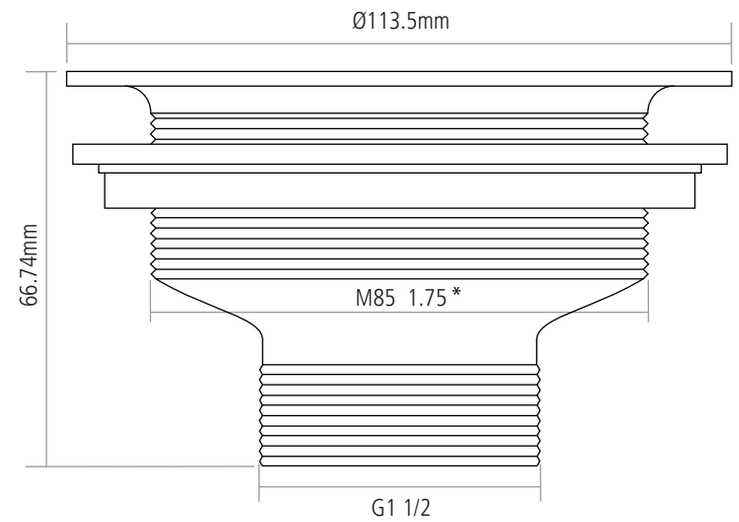
Ø113.5mm
66.74mm
M85 1.75 *
G1 1/2